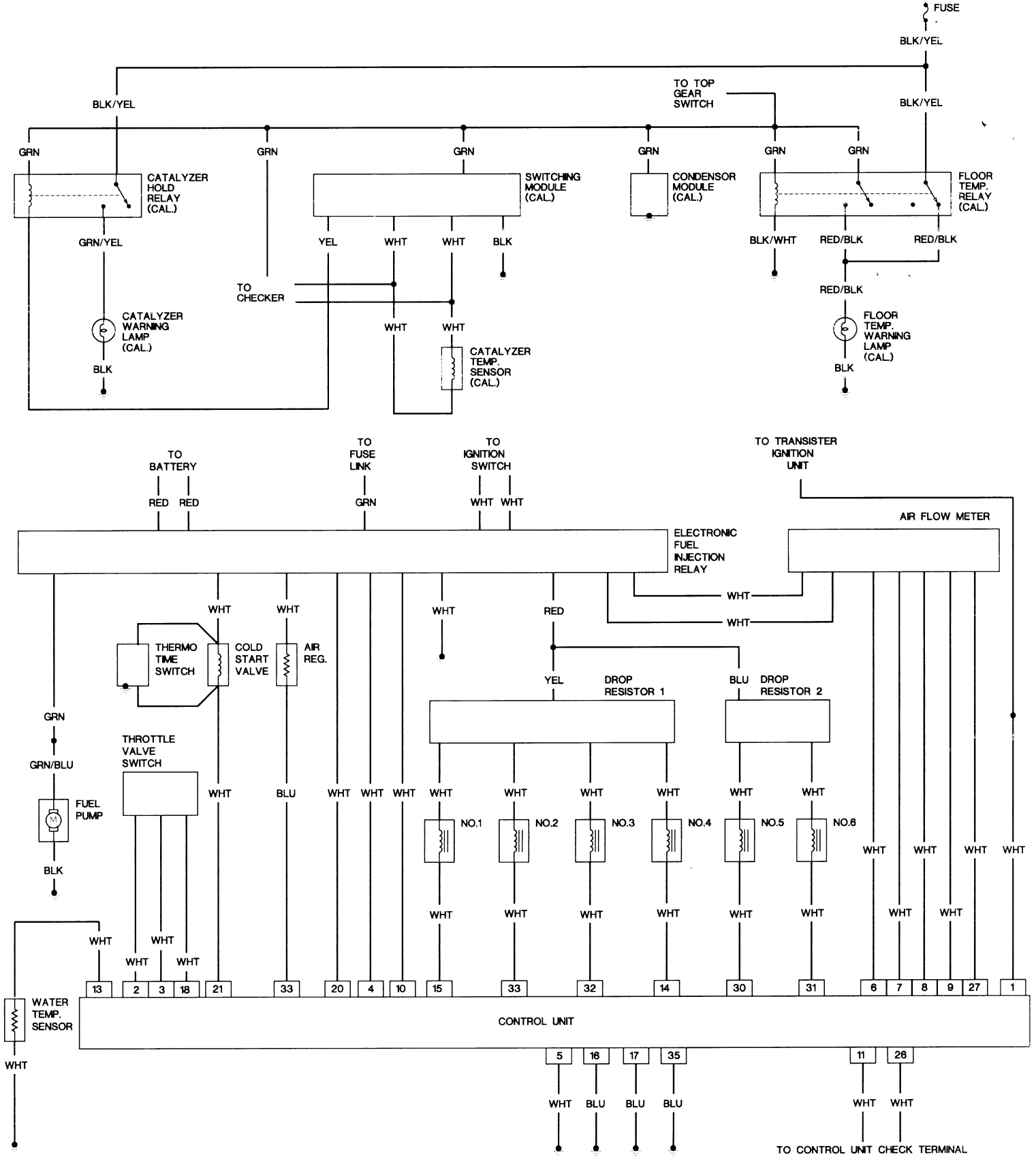
FUSE
BLK/YEL
BLK/YEL
TO TOP GEAR SWITCH
BLK/YEL
GRN
GRN
GRN
GRN
GRN
GRN
CATALYZER HOLD RELAY (CAL.)
SWITCHING MODULE (CAL.)
CONDENSOR MODULE (CAL.)
FLOOR TEMP. RELAY (CAL.)
GRN/YEL
YEL
WHT
WHT
BLK
BLK/WHT
RED/BLK
RED/BLK
TO CHECKER
RED/BLK
CATALYZER WARNING LAMP (CAL.)
WHT
WHT
FLOOR TEMP. WARNING LAMP (CAL.)
BLK
CATALYZER TEMP. SENSOR (CAL.)
BLK
TO BATTERY
TO FUSE LINK
TO IGNITION SWITCH
TO TRANSISTER IGNITION UNIT
RED RED
GRN
WHT WHT
AIR FLOW METER
ELECTRONIC FUEL INJECTION RELAY
WHT
WHT
WHT
WHT
RED
THERMO TIME SWITCH
COLD START VALVE
AIR REG.
YEL
DROP RESISTOR 1
BLU
DROP RESISTOR 2
GRN
GRN/BLU
THROTTLE VALVE SWITCH
FUEL PUMP
BLK
WHT
BLU
WHT WHT WHT
WHT WHT WHT WHT WHT WHT
NO.1 NO.2 NO.3 NO.4 NO.5 NO.6
WHT WHT WHT WHT WHT WHT
WHT WHT WHT WHT
WHT
WHT
WHT WHT
13 2 3 18 21 33 20 4 10 15 33 32 14 30 31 6 7 8 9 27 1
WATER TEMP. SENSOR
CONTROL UNIT
WHT
5 16 17 35 11 26
WHT BLU BLU BLU
WHT WHT
TO CONTROL UNIT CHECK TERMINAL