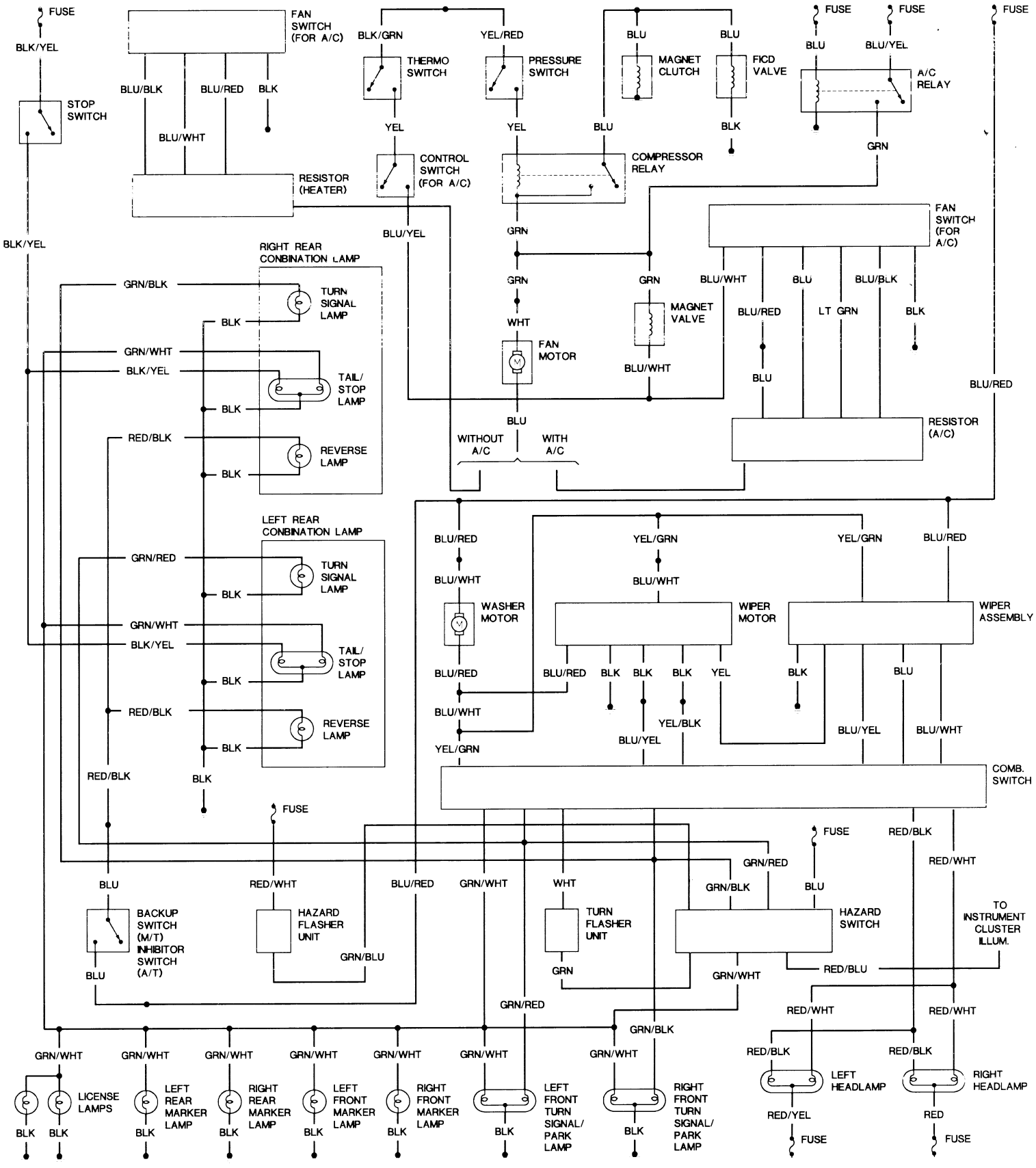
FUSE
BLK/YEL
STOP SWITCH
FAN SWITCH (FOR A/C)
BLU/BLK
BLU/RED
BLK
BLU/WHT
RESISTOR (HEATER)
BLK/GRN
THERMO SWITCH
YEL/RED
PRESSURE SWITCH
BLU
MAGNET CLUTCH
FICD VALVE
BLU/YEL
A/C RELAY
YEL
CONTROL SWITCH (FOR A/C)
COMPRESSOR RELAY
GRN
BLU/YEL
RIGHT REAR CONBINATION LAMP
GRN/BLK
TURN SIGNAL LAMP
GRN/WHT
BLK/YEL
TAIL/ STOP LAMP
RED/BLK
REVERSE LAMP
WHT
FAN MOTOR
MAGNET VALVE
BLU/WHT
BLU/RED
LT GRN
WITHOUT A/C
WITH A/C
LEFT REAR CONBINATION LAMP
YEL/GRN
WASHER MOTOR
WIPER MOTOR
WIPER ASSEMBLY
YEL
YEL/BLK
COMB. SWITCH
BACKUP SWITCH (M/T) INHIBITOR SWITCH (A/T)
HAZARD FLASHER UNIT
GRN/BLU
TURN FLASHER UNIT
HAZARD SWITCH
TO INSTRUMENT CLUSTER ILLUM.
RED/BLU
LICENSE LAMPS
LEFT REAR MARKER LAMP
RIGHT REAR MARKER LAMP
LEFT FRONT MARKER LAMP
RIGHT FRONT MARKER LAMP
LEFT FRONT TURN SIGNAL/ PARK LAMP
RIGHT FRONT TURN SIGNAL/ PARK LAMP
LEFT HEADLAMP
RIGHT HEADLAMP
RED/YEL
RED/WHT
RED