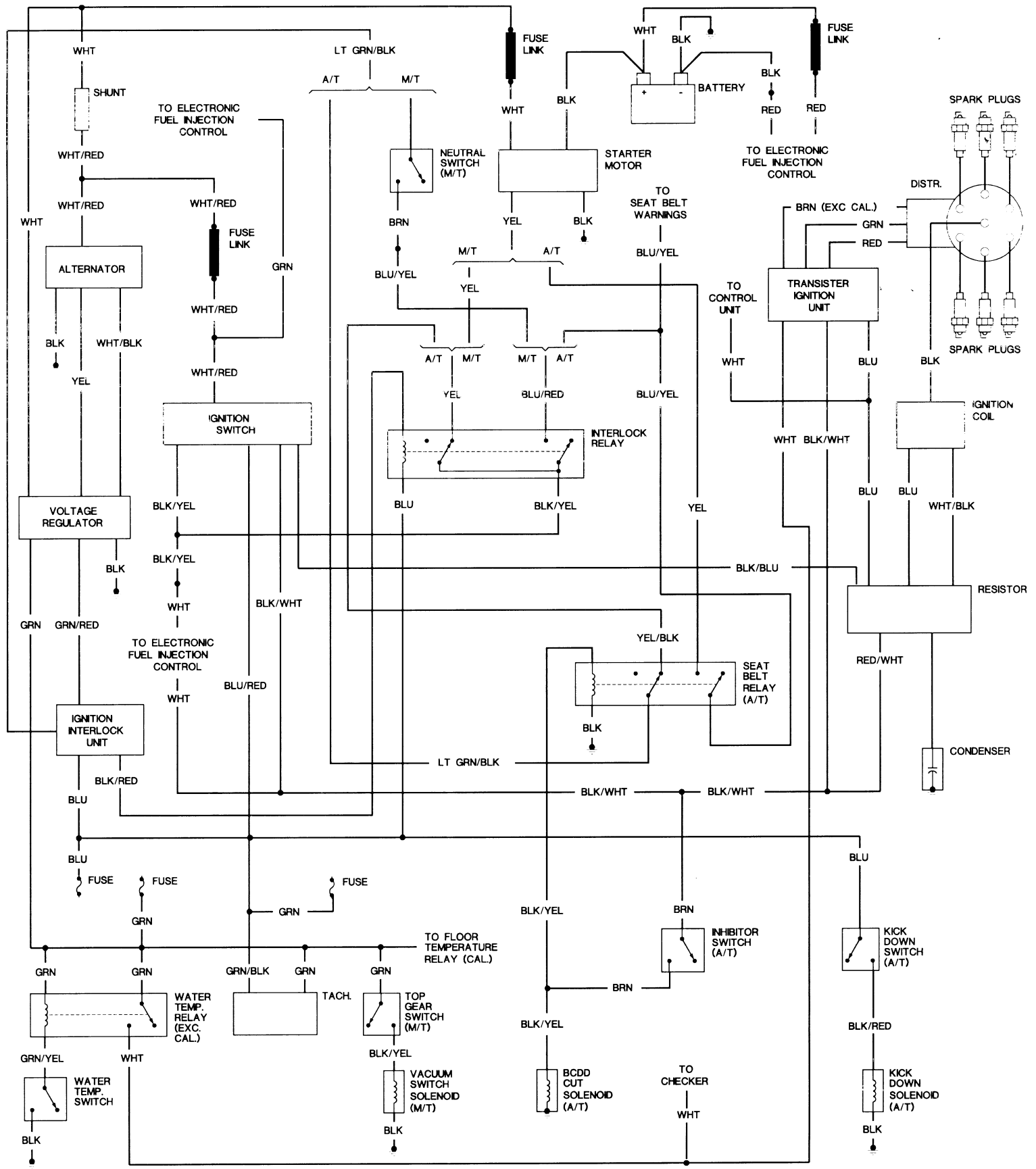
WHT
SHUNT
WHT/RED
WHT/RED
WHT/RED
WHT
ALTERNATOR
BLK
WHT/BLK
YEL
FUSE LINK
WHT/RED
WHT/RED
IGNITION SWITCH
VOLTAGE REGULATOR
BLK
BLK/YEL
BLK/YEL
WHT
GRN
GRN/RED
TO ELECTRONIC FUEL INJECTION CONTROL
WHT
IGNITION INTERLOCK UNIT
BLK/RED
BLU
BLU
FUSE
FUSE
GRN
GRN
GRN
GRN
WATER TEMP. RELAY (EXC. CAL.)
GRN/YEL
WHT
WATER TEMP. SWITCH
BLK
TO ELECTRONIC FUEL INJECTION CONTROL
GRN
BLK/WHT
BLU/RED
LT GRN/BLK
A/T
M/T
NEUTRAL SWITCH (M/T)
BRN
BLU/YEL
M/T
A/T
YEL
A/T
M/T
M/T
A/T
YEL
BLU/RED
INTERLOCK RELAY
BLU
BLK/YEL
LT GRN/BLK
BLK/WHT
FUSE
GRN
GRN/BLK
GRN
TACH.
TO FLOOR TEMPERATURE RELAY (CAL.)
GRN
TOP GEAR SWITCH (M/T)
BLK/YEL
VACUUM SWITCH SOLENOID (M/T)
BLK
FUSE LINK
WHT
BLK
STARTER MOTOR
YEL
BLK
BLK/YEL
BLK/YEL
BCDD CUT SOLENOID (A/T)
BRN
BRN
INHIBITOR SWITCH (A/T)
TO SEAT BELT WARNINGS
BLU/YEL
BLU/YEL
YEL
YEL/BLK
SEAT BELT RELAY (A/T)
BLK
TO CHECKER
WHT
BLK/BLU
BATTERY
+
-
WHT
BLK
BLK
RED
FUSE LINK
RED
TO ELECTRONIC FUEL INJECTION CONTROL
TO CONTROL UNIT
WHT
TRANSISTER IGNITION UNIT
BLU
WHT
BLK/WHT
BLK/WHT
BLU
BLU
BLK/RED
KICK DOWN SWITCH (A/T)
KICK DOWN SOLENOID (A/T)
BLK
SPARK PLUGS
DISTR.
BRN (EXC CAL.)
GRN
RED
SPARK PLUGS
BLK
IGNITION COIL
BLU
BLU
WHT/BLK
RESISTOR
RED/WHT
CONDENSER